



REAL AR70 INT 36

36° 2700K Warm White
Quicklink: Q3F5F

General

Cap	SBC / AR70
Construction	Aluminium
Dimmable	Yes

Dimmable	Yes
LED Type	Cree

Dimensions

Diameter	70mm
Length	46mm

Electrical

Energy Efficiency Rating	A
Maximum Wattage	8W
Power Factor	0.92
Voltage	240V

Light Characteristics

Beam Angle	36°
Colour Rendering Index	80
Colour Temperature	2700K Warm White
Halogen Equivalent Wattage	75W
Lumens	750 lm
Lumens Per Watt	94 lm/W

The **Dimmable Reality AR70 LED 8W Lamp and driver** is an LED lamp that matches a halogen lamp in terms of light source and aesthetics. This is achieved with the use of a single Cree LED chip with a reflector built around it to prevent glare from the light source. The result is truly warm and gives that arc of light we are all used to seeing with halogen.

The AR70 Reality Lamp is equivalent to a 75W AR70 halogen lamp and, like a halogen lamp, is dimmable.

Key Features

- Replicates halogen reflector
- LED positioned further back for anti glare
- Complies with October 2010 Part L regulations
- Fully dimmable with leading edge dimmers
- Equivalent to 75W AR70
- Fits SBC / B15 lampholder
- Emergency option available

Please Note: This LED lamp comes with a one year warranty as standard.

To discover more about LED United and their products, click below.

t: +44 (0)20 8874 2234 e: info@mr-resistor.co.uk **www.mr-resistor.co.uk**

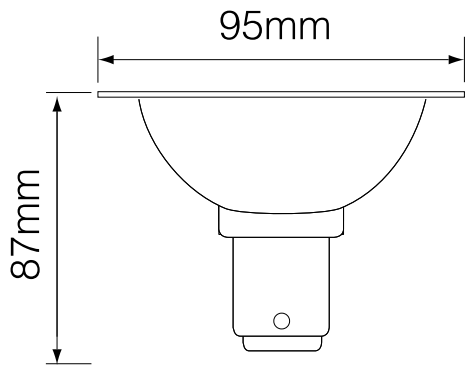

t: +44 (0)20 8874 2234 e: info@mr-resistor.co.uk www.mr-resistor.co.uk